NATIONAL SENIOR CERTIFICATE EXAMINATION
SUPPLEMENTARY EXAMINATION – MARCH 2018

MATHEMATICAL LITERACY: PAPER II

Time: 3 hours | 150 marks

PLEASE READ THE FOLLOWING INSTRUCTIONS CAREFULLY

1. This question paper consists of:
   - 14 pages
   - 5 questions
   - an Answer Sheet of 1 page
   - Appendix with 2 annexures
     - Appendix A – Map of China
     - Appendix B – Floor Plan

   Please check that your question paper is complete.

2. Remove the Answer Sheet from the middle of the question paper and submit with your Answer Book.

3. Answer all the questions.

4. It is strongly suggested that all working details be shown.

5. Round all the final answers off to TWO decimal places, unless stated otherwise OR where the context requires rounding up or down.

6. Approved non-programmable calculators may be used in all questions.

7. It is in your own interest to write legibly and to present your work neatly.

8. Maps and diagrams are not necessarily drawn to scale, unless stated otherwise.

9. Please start each question on a new page in the Answer Book.

IEB Copyright © 2018

QUESTION 1

During 2016 the news headlines were dominated with reports of the worst drought in South African history. A drought seriously affects a country's economy. The table below shows how various crop products have decreased by more than 4,5 million tonnes during the period 2014 to 2015.

2015's crops are down by more than 4,5 million tonnes

South Africa's six major crops and extent of land planted in 2014 and 2015

Crop	Size of final 2014 crop *in tonnes*	Latest 2015 crop forecast* *in tonnes*	Hectares planted in 2014	Hectares planted in 2015
Maize	14 250 000	9 838 500	2 688 200	2 652 850
Sunflower seed	832 000	656 800	598 950	576 000
Soybeans	947 000	1 041 600	502 900	687 300
Groundnuts	74 500	56 675	52 125	58 000
Sorghum	265 000	114 700	78 850	70 500
Dry beans	82 130	73 390	55 820	64 000

[Source: <http://mg.co.za> (Accessed on 3 September 2015)]

Use the table above to answer the questions that follow:

1.1 Use the data provided for sunflower seed to answer the following questions:

1.1.1 Determine how many kilograms of sunflower seed were found in the final crop of 2014. (3)

1.1.2 Calculate how many kilograms of sunflower seed were contained in one hectare planted in 2014. (3)

1.2 Show that the percentage decrease between the size of the final 2014 crop (in tonnes) and the latest 2015 crop forecast (in tonnes) for maize exceeds 30%. (4)

1.3 One hectare is measured as 100 m × 100 m. Show that over 558 million m^2 of dry bean crops were planted in 2014. (2)

IEB Copyright © 2018

1.4 Dry beans are packed in smaller cube boxes for transport.

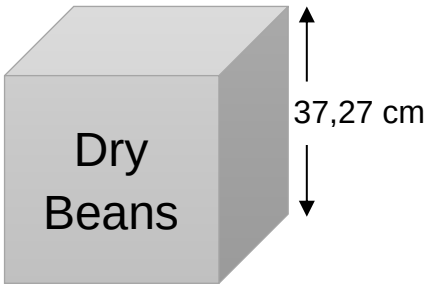

Calculate how many boxes of dry beans were produced in 2015 if 1 tonne = 1 m^3 and each box has a volume of 51 770 cm^3. (6)

1.5 The information below shows how prices of various food products increased during December 2015 to January 2016. These increased prices were due to drought, fuel price increases and inflation.

[Source: <www.businesslive.co.za>]

Note: The price shown is the new price for January 2016.

1.5.1 Spinach prices have drastically increased from December 2015 to January 2016. Calculate the percentage increase in spinach (4 bunches) prices from 2015 to 2016. (4)

1.5.2 According to www.inflation.eu the inflation rate from January 2016 to January 2017 was 6,79%. Determine the price of 10 kg Rice in January 2017. (3)

1.6 The drought has influenced the cost of food products and hence food costs in stores. Carefully study the ingredients, nutritional facts and instructions for preparing low-carbohydrate egg breakfast muffins.

Nutrition Facts

Serving Size 461 g
One serving = 3 muffins

Amount per Serving	
Calories 259	Calories from Fat 124
	% Daily Value*
Total Fat 13,8 g	**21%**
Saturated Fat 4,2 g	**21%**
Cholesterol 491 mg	**164%**
Sodium 493 mg	**21%**
Potassium 948 mg	**27%**
Total Carbohydrates 15,8 g	**5%**
Dietary Fibre 4,8 g	19%
Sugar 10,5 g	
Protein 19,8 g	
Vitamin A 96%	Vitamin C 190%
Calcium 12%	Iron 20%
Nutrition Grade A	
*Based on a 2 000 calorie diet	

INGREDIENTS (6 muffins)

- 1 bell pepper (your favourite colour)
- 3 spring onions
- 4 little cherry tomatoes/one normal tomato
- 6 eggs
- A good pinch of salt (about ¼ to ½ tsp)
- 12 slot muffin tin
- 2 slices cheese; around 50 g (e.g. cheddar)
- Handful spinach/green leaves

INSTRUCTIONS

1. Preheat the oven to 390°F.
2. Wash and dice the pepper, onions and tomatoes and put them in a large mixing bowl.
3. Add the eggs and salt and mix well.
4. Optionally add some hot sauce, curry powder ... whatever you like. Hot sauce is great!
5. Pop the tray into the oven for 15-18 minutes or until the tops are firm to the touch.
6. The oven has capacity for only one tray at a time holding a maximum of 12 muffins for a maximum of 18 minutes.

[Source adapted from: <hurrythefoodup.com/low-carb-egg-breakfast-muffins/>]

1.6.1 Determine the number of cherry tomatoes required for 48 muffins. (3)

1.6.2 Trishana states that she will not be able to bake 48 muffins by 12:00 if she starts baking at exactly 10:00. Verify, with calculations, whether her statement is correct if the oven takes a maximum of 18 minutes for each tray she places in the oven and allowing an additional 3 minutes for change of trays. (7)

IEB Copyright © 2018

1.6.3 Convert the oven temperature to °C, rounding your answer to the nearest 100 °C.

You may use the formula: $°F = \frac{9}{5}\ °C + 32$ (4)

1.6.4 The nutritional facts state that 259 calories can be gained from one serving. Determine the amount of calories you would gain if you ate 4 muffins. (3)

[42]

QUESTION 2

Jordan plans a holiday trip to China. He researches flight cost, time zone differences, the exchange rates between the Chinese yuan and the British pound and an 11-day tour to the cost of R36 685 (excluding flight costs and spending money) with Wendy Wu Tours (<http://www.wendywutours.co.za/china/tours/a-china-experience.htm>).

2.1 Use the above information and the map of China found on Appendix A to answer the questions that follow.

2.1.1 His one way flight cost is R8 498 from Johannesburg to Shanghai. The exchange rate on 31 March 2017 between the Chinese yuan and the British pound, and the South African rand and the British pound is given.

1 Chinese yuan = 0,12 British pound
AND
1 South African rand = 0,060 British pound

[Source: <www.x-rates.com>]

Determine the total cost (in rand) of Jordan's trip to China if he needs to take 3 300 Chinese yuan per day for spending money. (8)

2.1.2 Use the current times in China and South Africa given below to calculate the time difference between China and South Africa.

Location	**Current Time**
Beijing, China	Tue, 10 January 2017 03:20 AM
Pretoria, South Africa	Mon, 09 January 2017 09:20 PM

(2)

2.1.3 Jordan booked the China Experience tour with Wendy Wu Tours. This tour runs from Shanghai to Xian to Beijing. Calculate the distance (as the crow flies) from Shanghai to Beijing via Xian using the scale on the map. (Round your answer to the nearest 100 km.) (4)

2.2 In Beijing, the capital of China, Jordan visits various temples and museums.

2.2.1 Jordan takes a taxi from White Clouds Temple to Beijing Natural History Museum. The journey takes him 18 minutes to travel the 10,2 km.

Show that the average speed of the taxi is more than 30 km/h if: Distance = Speed × Time. (3)

IEB Copyright © 2018

2.2.2 Jordan leaves the White Clouds Temple at 09:20. He spends 3,5 hours at the museum. He heads back to the Temple but is delayed due to traffic. This takes 23 minutes. Jordan needs to catch a bus back to the airport at 13:25. Show by calculation, that he will not make it back to the airport on time. (4)

2.3 While on tour Jordan learns 4 interesting facts as stated below:

- **China is the most populous nation on Earth with an approximate population of 1,3 billion (1 300 000 000) people in 2017.**
- **One in every five people in the world is Chinese.**
- **China's railway lines could loop around Earth twice.**
- **The world population is projected to be 7,5 billion people in 2019 growing at a rate of 1,13% annually.**

[Source: <www.worldometers.info/world-population>]

2.3.1 Give a simplified ratio of the population of China to the 2019 world population. (2)

2.3.2 Calculate the projected population of China, by finding the values of A and B in the table below. Assume the projected growth rate remained constant at 1,13% per year from 2017 to 2019.

Chinese Population 2017	Chinese Population 2018	Chinese Population 2019
1 300 000 000	A	B

(4)

2.3.3 China is 9,597 million km^2. Calculate the population density (number of people per km^2) in China during 2017. (3)

2.3.4 Calculate the projected number of Chinese people in the world in 2019. (2)

2.3.5 The circumference of the earth around the equator is 40 075 km. Calculate the length of China's railway lines. (2)

[34]

QUESTION 3

3.1 Motor vehicle sales grew 0,6% year-on-year in February 2015 to R44,4 billion (current prices – 2017), according to preliminary results released by Stats SA.

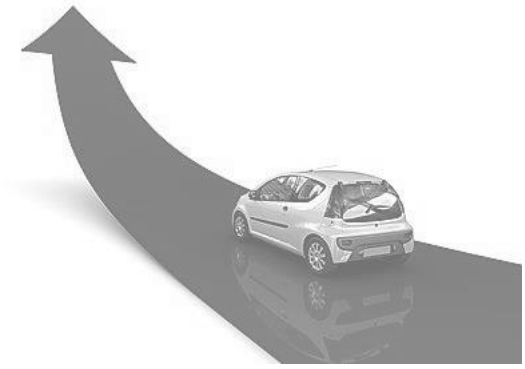

Here is a list of the best-selling passenger cars and bakkies in South Africa for the months of July, August and September in 2015.

	Number of vehicles sold in 2015		
	September	**August**	**July**
Volkswagen Polo Vivo	4 180	2 711	2 871
Toyota Hilux	3 431	2 449	3 546
Ford Ranger	2 865	2 472	2 618
Toyota Corolla/ Quest/Auris	2 865	2 218	1 919
Volkswagen Polo	2 259	2 313	2 084
Nissan NP200	1 606	1 565	1 411
Toyota Etios	1 602	1 417	1 515
Chevrolet Utility	1 382	1 301	1 294
Isuzu KB	1 265	1 400	1 299
Toyota Quantum	1 107	A	1 124
Totals for Months	**22 565**		**19 681**

[Source: <www.statssa.gov.za>]

3.1.1 Determine the mean (average) number of cars sold in September 2015. (3)

3.1.2 The mean number of cars sold in August 2015 is 1 899,3. Determine the number of Toyota Quantum mini busses (A) sold in August 2015. (5)

3.1.3 Determine the median number of cars sold in July 2015. (3)

3.1.4 Identify the modal car sold during August 2015. (2)

IEB Copyright © 2018

3.2 According to the horizontal bar graph given below, the colour white is globally the most popular colour for a car. Determine the number of white vehicles if there are 9 797 413 registered vehicles in South Africa.

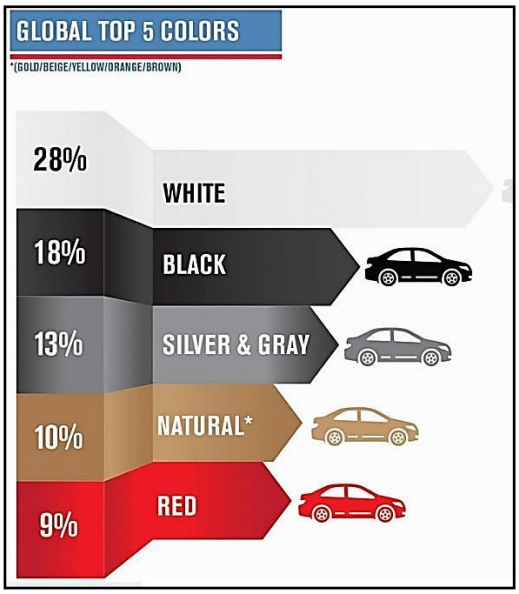

[Source: <http://instafinish.com>]

(2)

3.3 The world of marketing has undergone the most significant changes since the invention of television and the Internet. Advertising budgets worldwide in 2014 were projected to be about 100 billion dollars.

The pie chart below illustrates a company's advertising budget as allocated to a variety of advertising media.

For example, in 2012 a company would have allocated 18,7% of their marketing budget to advertising in Newspapers. This decreased to 14,9% by 2015. This is in contrast to the 2012 budget for Internet marketing of 18,3% which increased to 24,6% by 2015.

Study the accompanying pie chart and answer the questions that follow:

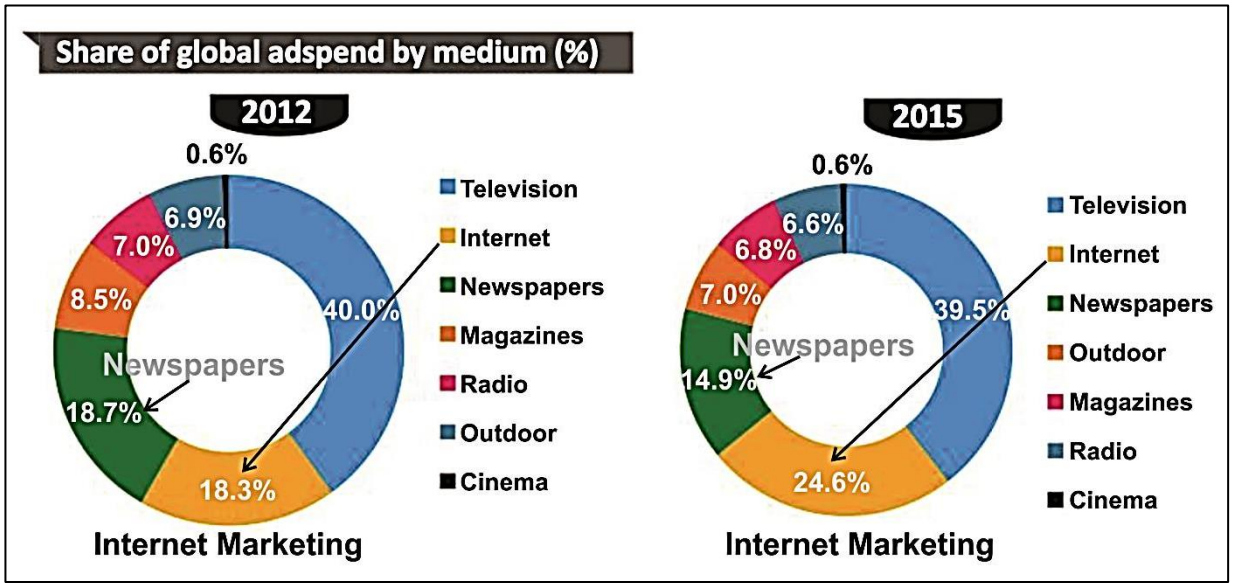

[Source: <http://techcabal.com> (Accessed 26 February 2015)]

3.3.1 Thabo reads the following question based on the above pie charts in his Mathematical Literacy test:

"In 2012, a car dealership allocated R120 000 towards their marketing. This amount increased to R150 000 by 2015. Determine the difference in rand spent on Internet marketing between 2012 and 2015."

Study how Thabo has answered the question.

R120 000 × 18,3 = R2 196 000
R150 000 × 24,6 = R3 690 000
R3 690 000 – R2 196 000 = R1 494 000

Thabo's teacher stated that his answer was wrong. Explain Thabo's error and then complete the correct calculations. (5)

3.3.2 Provide a reason why the percentage for a marketing budget in Newspapers decreased from 18,7% to 14,9% between 2012 and 2015. (2)

[22]

IEB Copyright © 2018

QUESTION 4

4.1 You decide to start a small advertising business. Refer to Appendix B. You convert the second bedroom in your flat into an office space.

4.1.1 The length of wall A is 5,55 m and the height of the wall is 2,4 metres.

One litre of paint costs R90 and covers 6,3 m^2. Verify, with calculations, whether a budget of R400 is sufficient to paint wall A with a double coat of paint. (6)

4.1.2 Below are dimensions of a desk you plan to place in your office. You need two such desks. Determine whether or not you can place two such desks next to each other along the length of the wall labelled A. (3)

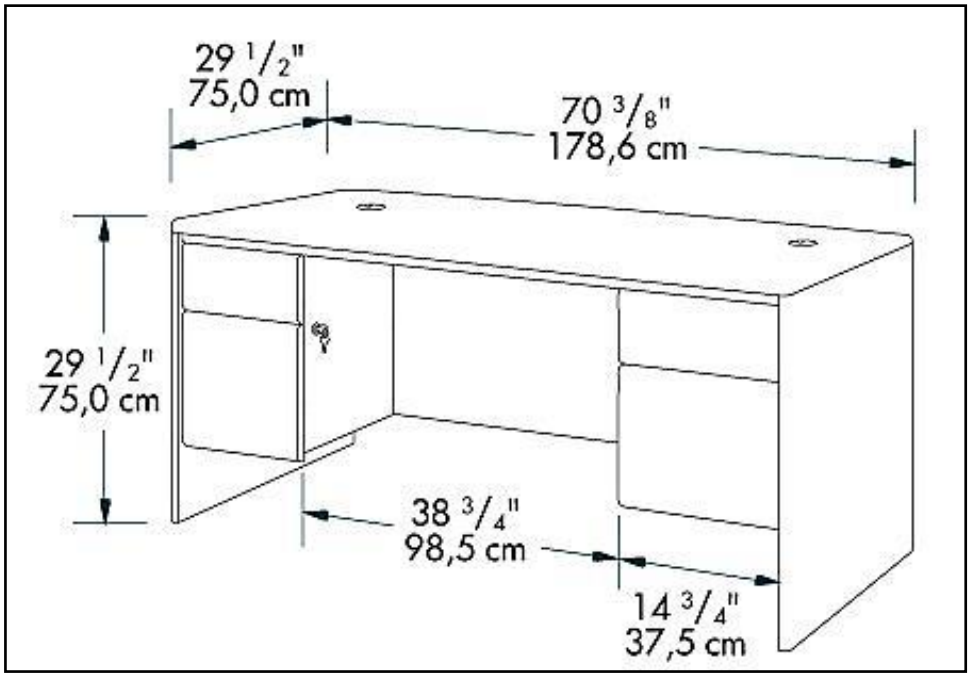

[Source: <www.officefurniture.com>]

4.1.3 A standard door is 800 mm wide and opens to its maximum at 90° (as shown on the floor plan). Justify that a door covers an area of 502 400 mm^2 as it swings open.

Area of a circle = 3,14 × $radius^2$. (2)

4.2 You design small advertisements for Facebook marketing. You decide to charge R1 000 per design. Each month you have to pay R1 200 fixed expenses and an Internet fee of R350 per advertisement. The following table shows the relationship between total expenses, income and the number of advertisements you design per month.

Number of advertisements per month (N)	**0**	**1**	**2**	**3**	**5**	**10**	**B**
Total expenses (Rand) per month (E)	1 200	1 550	1 900	2 250	2 950	4 700	6 450
Total income (Rand) per month (I)	0	1 000	2 000	**A**	5 000	10 000	15 000

4.2.1 An equation that expresses the income in terms of the number of advertisements is:

Income = 1 000 × number of advertisements.

Write down an equation that calculates the expenses in terms of the number of advertisements made in a month. (2)

4.2.2 Determine the missing values A and B. (4)

4.2.3 Use the table to draw TWO straight line graphs showing the expenses and the income on the **Answer Sheet**. (6)

4.2.4 Use your graph to determine the number of designs that must be made to achieve a profit of R2 000. (2)

4.2.5 Explain with a reason or calculation, whether or not this business is a success. (2)

IEB Copyright © 2018

4.3 You decide to purchase an Apple MB Pro 1 Laptop on which to design your Facebook advertisements. You research prices on www.pricecheck.co.za. These were your findings:

OPTION ONE <www.exCellular.co.za>	OPTION TWO <www.takealot.com>
Cash price:	Cash price:
R25 999 VAT incl.	R22 718,42 VAT excl.
Also available on Hire Purchase at	*Also available on Hire Purchase at*
R 1 263 for 24 months	*R1 024,35 for 36 months*

NOTE: **Remember VAT is 14%.**

4.3.1 Determine which option offers the best cash deal. Support your answer with calculations. (3)

4.3.2 How much more will you pay if you buy the laptop in Option One on Hire Purchase agreement instead of paying cash? (3)

4.3.3 Give TWO valid reasons why Option Two seems more attractive than Option One. (2)

4.4 In your first year of business, you have a taxable turnover (taxable income) of R275 000 (2017) and in your second year, R740 000 (2018).

Basic Tax Table

Turnover (R)	Rate of tax (R)
0–335 000	0%
335 001–500 000	1% of each R1 above 335 000
500 001–750 000	1 650 + 2% of the amount above 500 000
750 001 and above	6 650 + 3% of the amount above 750 000

[Source: <www.sars.gov.za>]

Show with calculations, that the business profit after tax deductions for the first two years exceeds R1 million. (7)

[42]

QUESTION 5

Susan received a Mason jar as a Christmas gift. The Mason jar was filled with pre-measured dry ingredients for Smarties cookies.

All Susan has to do is add the wet ingredients to the contents of the jar and bake.

Inside the jar are 21 Smarties sweets with which she can decorate the cookies. There are 12 green and 9 red Smarties. Susan picked two sweets at random.

PROBABILITY OF PICKING TWO SWEETS AT RANDOM

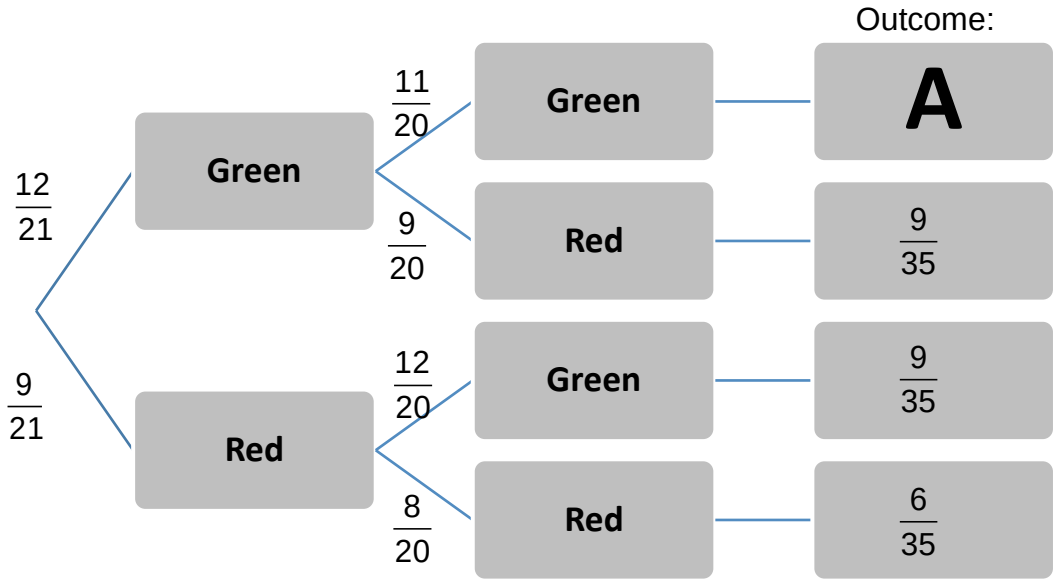

5.1 Study the above tree diagram to determine the following probabilities:

5.1.1 Both sweets are green (A). (3)

5.1.2 At least one sweet is red. (3)

5.2 Susan was calculating the probability of picking three green Smarties and got this far:

$$\frac{12}{21} \times \frac{11}{20} \times - = -$$

Complete the calculation for her, representing this probability as a percentage. (4)

[10]

Total: 150 marks

IEB Copyright © 2018